WALTHER

G22
WALTHER

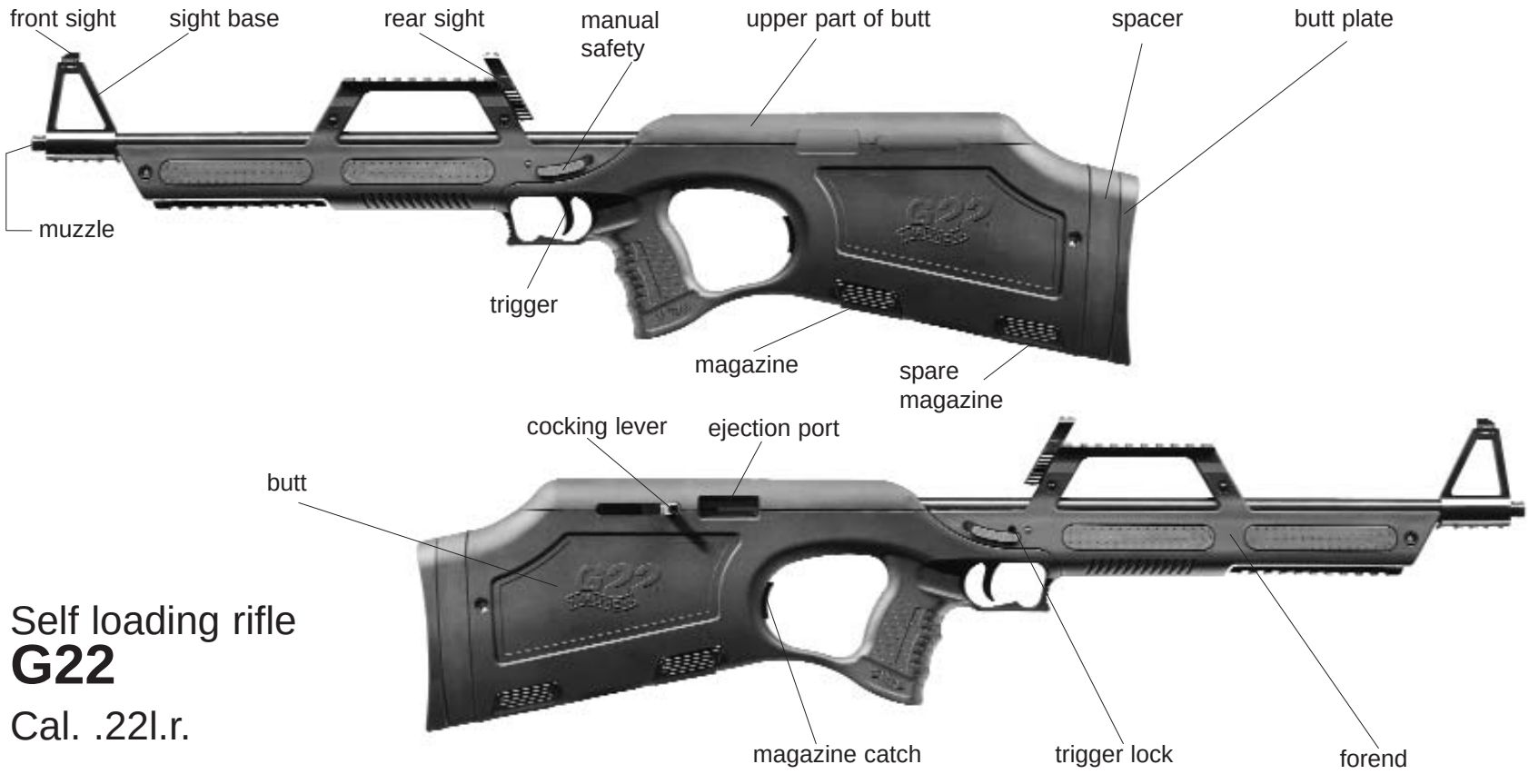

Self loading rifle

G22

Cal. .22l.r.

Operation instructions

D GB F E I

Important instructions for the use of firearms

It should be remembered that even the safest gun is potentially dangerous to you and others when it is not properly handled.First of all read and understand the operating instructions and learn how the weapon works and is to be handled.Always treat an unloaded weapon as if it were loaded.



Always bear in mind: Keep your finger away from the trigger unless you really intend to fire. Always keep your weapon pointing in a safe direction so that you and others cannot be endangered.



Caution: Because of the short construction of the rifle, it is possible to hold a hand in front of the muzzle. Always make sure that you keep both hands behind the muzzle!

Do not use force when disassembling or assembling your weapon. A gun can only be safe as long as it is in a flawless technical condition.
Incorrect handling and lack of maintenance may lead to malfunctions and reduced safety of the weapon.
Always be aware of possible risks from dropping your pistol or from corrosion or other external influences. In such cases, have your weapon inspected by a competent gunsmith before using it again.
Unauthorized modifications to the mechanism, damages caused by the application of force and modifications effected by third parties will lead to the manufacturer not to assume any liability. Only an authorized and qualified gunsmith is allowed to work on a gun.

Contents

page

Components....18
General....19
Operation of safeties....20
Inspections....21
Loading the gun....22
Insertion of the first cartridge....22
Decocking the hammer....23
Cocking indicator....23
Gun with empty magazine....23
Unloading the gun....24
Disassembly and reassembly of the gun....24
Butt extension....25
Disassembly....25-26
Reassembly....26
Sights....27
Cleaning....27
Storage....28
Repairs....28
Warranty....28
Technical data....28
Parts....29
Exploded view....30
Special accessories....31-32

CAUTION: Because of its construction as a bullpup rifle, the weapon can be used in its appropriate configuration only. A rifle in left-hand configuration must only be fired from the left shoulder, a rifle in right-hand configuration must only be fired from the right shoulder. Otherwise ejected cartridge cases and the action of the cocking lever might cause injuries to the face.

Operation of the safeties (safety devices)

1. Trigger safety

To put the safety to "safe/on", push the safety slide (as shown in fig. 1) to the front position. In the "fire/off" position, two red markings and a red dot in front of the safety slide (see fig. 2) are visible.

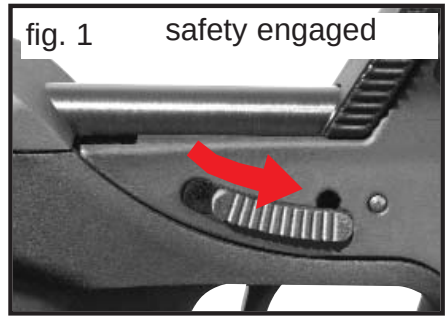
fig. 1 safety engaged

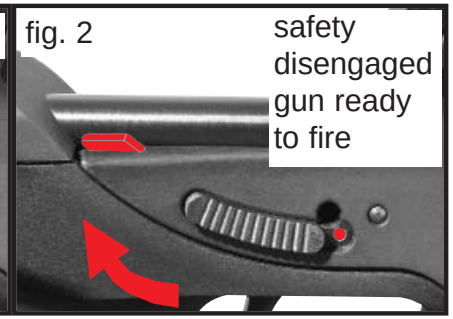
fig. 2 safety disengaged gun ready to fire

CAUTION: It should be made a common habit to leave the manual safety engaged until you really intend to fire.

2. Trigger lock

The enclosed key is used to lock the trigger mechanism of the G 22. Without the key it is impossible to disengage the safety. Use this feature to prevent unauthorized persons from using your weapon. At the horizontal position of the key, the safety is released to be disengaged, at the vertical position, the weapon is blocked.
Important: The weapon can only be locked when the safety is engaged/on "safe".

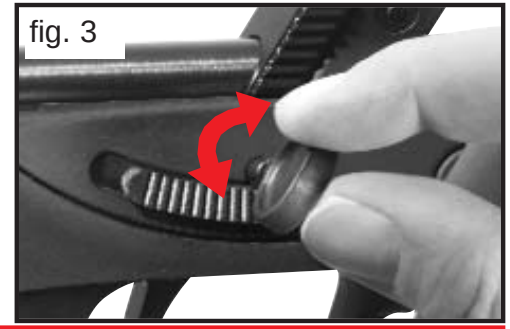
fig. 3

3.Magazine safety

Without the magazine inserted, the magazine safety of the G 22 prevents a round to be fired. A cartridge in the chamber cannot be ignited.

If you remove the magazine and do not wish to commence firing, check the chamber and clear it if necessary, even though the safety is engaged.

CAUTION:All safety devices of the weapon are mechanical safeties, and the shooter is the only one who can engage and disengage these safeties. NEVER RELY SOLELY ON MECHANICAL SAFETIES - always be extremely careful and avoid situations which could lead to an accident.

Inspections before use



Make sure that the rifle is unloaded (chamber cleared, barrel clear of any obstructions, magazine empty) for inspection and that the safety is engaged.

Functional inspection

1. Breech action: Remove magazine, retract bolt all the way back by means of the cocking lever.
   After the bolt has been released, the main spring must push it to its foremost position.
2. Bolt catch lever: Insert empty magazine, retract bolt all the way back by means of the cocking lever.
   The bolt must be caught in its rearmost position.
3. Magazine safety: Remove magazine, retract bolt slightly by means of the cocking lever.
   Release bolt and allow it to run forward. Disengage safety and pull the trigger. The hammer must not fall.
4. Decocking: Insert an empty magazine for decocking and pull the trigger. The hammer must fall.
   IMPORTANT: Make sure that there is no cartridge left in the chamber! Then pull the trigger.

Inspection after use



Make sure that the pistol is unloaded (chamber and barrel must be clear) after use, that the magazine is empty and that the safety is engaged. Decock the hammer by pulling the trigger.

CAUTION:
Read and understand the operating instructions thoroughly before you load your gun. **Malfunction may occur when ammunition with low propellent charge is fired.In order to prevent damage to shooter and weapon, only ammunition is to be used which conforms with SAAMI standards or CIP standards respectively.**

Loading the gun

Engage safety.
Press magazine catch and remove empty magazine (fig. 4). Use the side-mounted button to press the follower down and insert a cartridge under the magazine lips (fig. 5). Do not use force. Damaged magazine lips will cause malfunctions and will render the weapon useless. When a magazine is to be emptied, remove the cartridges one after the other by pushing them to the front side of the magazine. Insert the loaded magazine into the magazine well of the rifle until it locks in place (fig. 6).

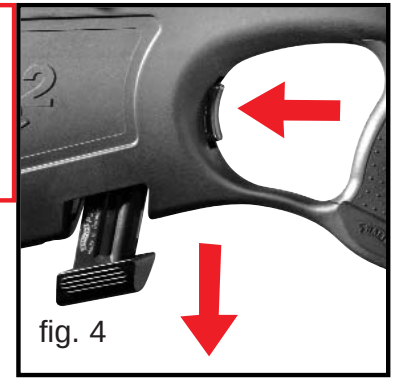
fig. 4

CAUTION!Rapid or forced insertion of the magazine into the magazine well may cause the upper cartridge to tilt which will lead to malfunctions.

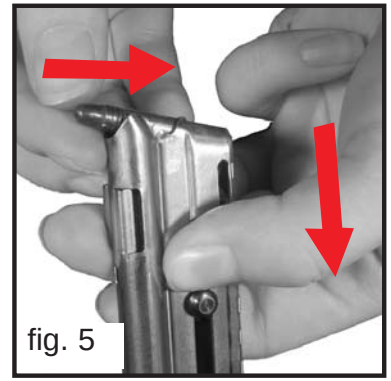
fig. 5

Loading the chamber with the first cartridge

Pick up the gun with your hand, hold it at an angle of approx. 45 degrees and point the muzzle in a safe direction. Retract the bolt with the cocking lever and then release it.
The slide travels forward and inserts the first round into the chamber, the hammer is now cocked. Leave the safety engaged until you really intend to fire.


fig. 6

CAUTION! Your gun is now ready to fire. Regard safety instructions, keep shooting finger away from trigger until you really intend to fire.

Decocking the hammer.

Engage the safety. Make sure that the weapon is unloaded, retract the bolt with the cocking lever. If a cartridge were in the chamber, it would be ejected. Disengage the safety and pull the trigger.

When decocking the weapon and removing the magazine, always hold the weapon in a way that you do not cause a hazard to other persons.

Cocking indicator

The G22 has a cocking indicator.
Look into the window on the cocking lever to find out whether the hammer is cocked.
The hammer is cocked when the red marking is visible! (see fig. 7).
The hammer is not cocked when the white dot is visible! (see fig. 8).

fig. 7



fig. 8



Rifle with empty magazine

After the last round was fired, the slide stop holds the slide in its opened position. Engage the safety.
Take the weapon into your shooting hand and hold it down in a slanted way so that no other persons are endangered. In case you intend to commence shooting, replace empty magazine by a full one. By pulling the cocking lever, the bolt travels forward and chambers the first cartridge. Keep your weapon in your shooting hand
and keep it pointing in a safe direction so that there is no danger for other persons.

CAUTION! The pistol is ready to fire. Regard safety instructions and leave your shooting finger off the trigger.

If firing is not to commence, engage safety, remove magazine, check the chamber and clear it if necessary, insert empty magazine and decock hammer by pulling the trigger.

Unloading your gun

Engage safety. Remove magazine and retract slide. The round in the chamber is extracted and ejected.



Make a visual inspection of the barrel - it must be clear!

Allow bolt to travel forward, insert empty magazine and decock hammer by pulling the trigger.

Disassembly and reassembly of the gun

It is not necessary to strip the pistol any further as is described in this manual. Further disassembly, improper assembly and disregard of the instructions will lead to loss of warranty, and under no circumstances will the manufacturer then be liable for damages to persons or property.



To do so, engage the safety, remove the magazine and inspect the weapon, it must be unloaded.

Butt extension / shortening

In order to adapt the length of the butt to the shooter's requirements, different spacers can be mounted on the butt or removed.
Loosen the screws on the butt. Now add the desired number of spacers (0, 1 or 2) to the butt end and fix them with the appropriate screws (refer to fig. 9 to 12.).

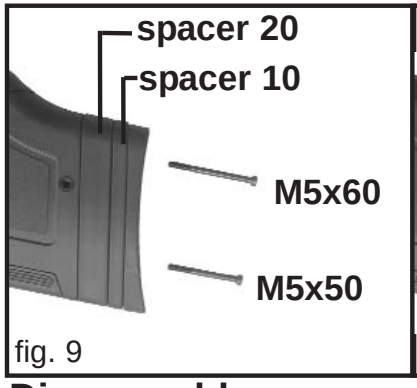

fig. 9

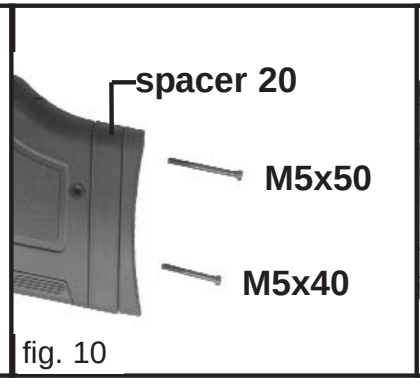

fig. 10

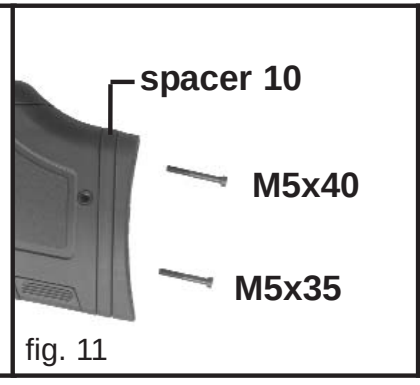

fig. 11

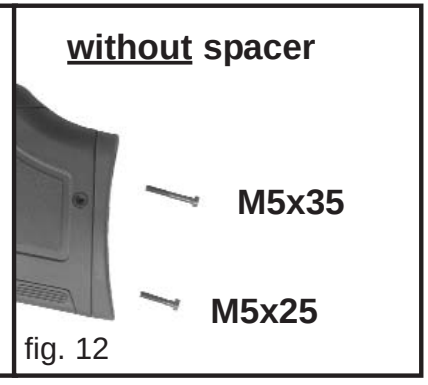

fig. 12

Disassembly

To clean the system and the breech, some parts have to be disassembled.
Loosen the Allen screw at the lower part of the butt (see fig. 13), remove the transversal locking pin above the safety (see fig. 14) and withdraw the butt vertically downwards.
Remove the trigger bar from the push rod as shown in fig. 15.

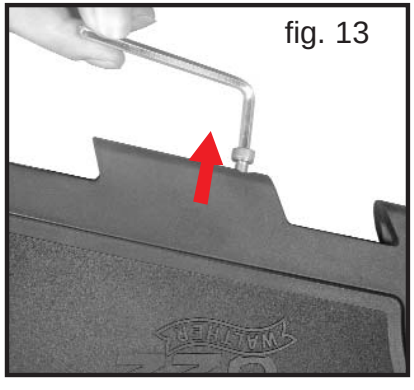
fig. 13

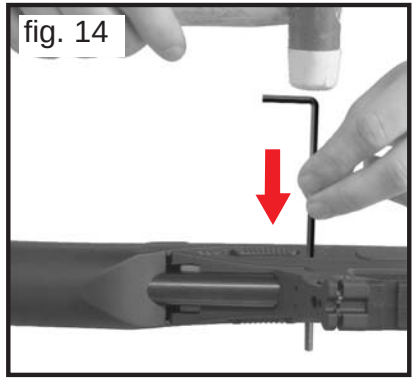
fig. 14

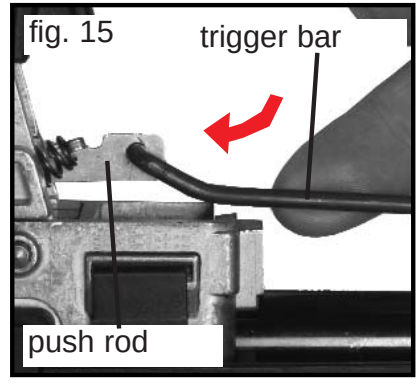

fig. 15

Remove the two pins which connect the system with the breech housing (see fig. 16) and remove the system vertically downwards.
Caution: The spring of the magazine safety (fig. 17) and the bolt catch lever with spring (fig. 18) might drop out. Both have to be kept in position (see fig. 19)!
Now the upper part of the butt can be removed upwards.
After this, the frame of the ejection port, the two inserts and the ejector are loose and can be removed.
To clean the barrel, you have to pull the cocking lever (see fig. 20).

fig. 16

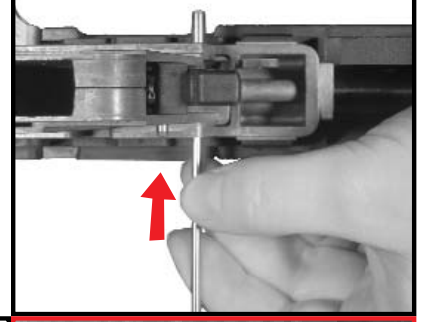

fig. 17

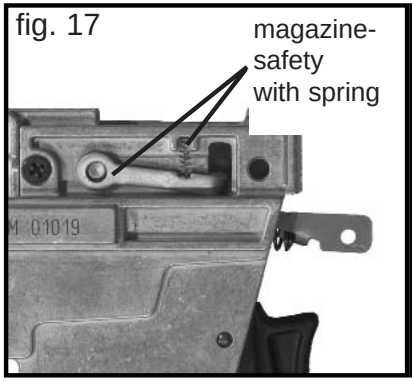

fig. 18

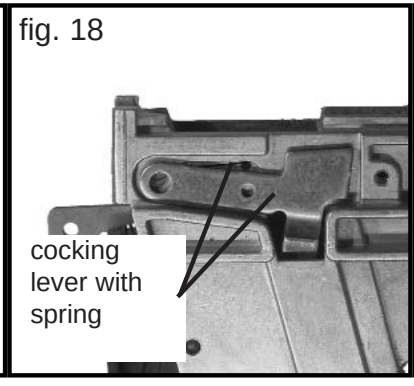

fig. 19

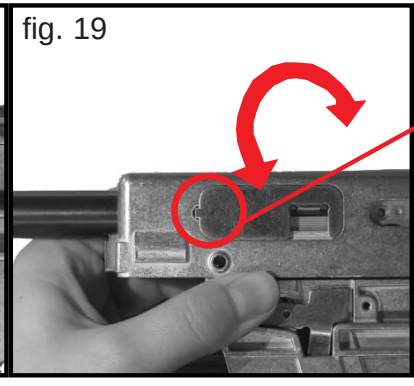

fig. 19 a.

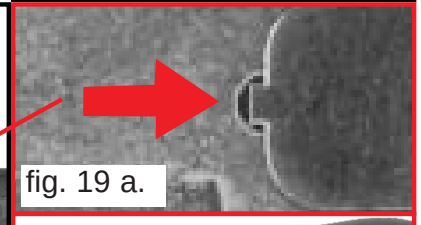

fig. 19 b.

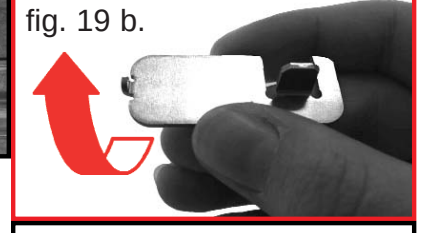

Montage

The remaining assembly is in reverse order as the disassembly.
Make sure the spring is in the correct position on the magazine safety (fig. 17) and the cocking lever with spring (fig. 18). When installing the ejector it is to be made sure that the projection on the ejector is seated correctly in the recess of the receiver
(refer to illustration 19 a/b)!
The hammer must be cocked when the system is re-assembled.

Incorrect ejector installation could lead to malfunctions, and the chance of personal injury. Pay special attention to the correct position of the ejector
(check figure 19 a).

fig. 20

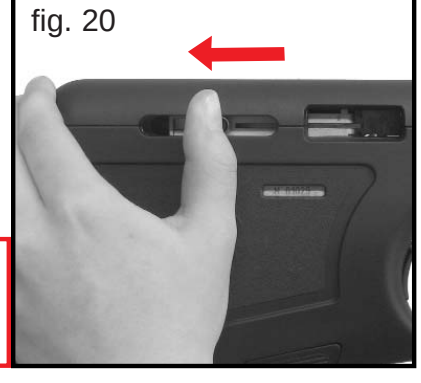

A rifle for right-hand operation must never be used as a rifle for left-hand operation! The ejected cartridge case and the action of the cocking lever may cause injuries to the face.

Sights

The G22 will enable the shooter to compensate differences in ammunition and range. To do so, the rear sight disk (pinned to the rear sight carrier) (fig. 21) is to be rotated, there are six different elevation settings on the rear sight notch. The current setting can be seen on the disk (stages 1 - 6). To mount a telescopic sight or similar accessories on the Weaver rail, the rear sight can simply be lowered by pushing it down (see fig. 22).

Bild 21

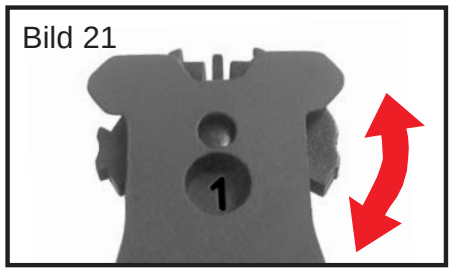

Bild 22

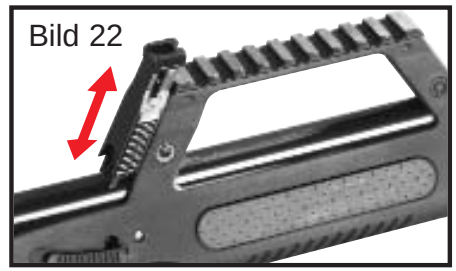

Cleaning

In order to keep the weapon functional and to extend its service life, it should be cleaned and maintained at regular intervals.

Engage the safety, remove the magazine.

Disassemble the weapon, clean fouled parts of breech, magazine lips, follower and receiver with a brush and a cloth. Clean the barrel with commercially available brushes and wicks. Apply a thin coat of oil to all metal parts. Reassemble gun and check for proper function.

Storage



Never leave a loaded pistol unattended!

The weapon should always be stored in unloaded condition with the safety engaged and the trigger lock locked.
Keep Pistol away from children and unauthorized persons. Weapon and ammunition are to be stored separately.

Repair of Walther weapons

CAUTION! A weapon which fails to function properly is dangerous. It should be safely kept in a way that prevents its use before it is repaired. It is difficult to repair a weapon, and improper assembly can lead to dangerous malfunctions.



Only let an authorized and qualified gunsmith inspect and repair your weapon!

Warranty for Walther weapons

Within the first year after the date of purchase, the Walther company will repair or replace your defective weapon free of costs provided the defect was not caused by own fault. Please hand the weapon over to an authorized dealer, describe the problem and enclose a proof of purchase.



IMPORTANT! When transporting a firearm, make sure that it is unloaded and that the safety is engaged.

Technical data

caliber..... .22 l.r.
action.....blowback
trigger.....single stage trigger
trigger pull.....approx. 800g
magazine capacity.....10 rounds
dimensions (length/height/width).....
.....20-750/ 220/55
barrel length.....508mm
sight length.....ca.280mm
width of rear sight notch.....2mm
front sight width.....2.5mm
weight (without magazine).....2600g
weight magazine (empty).....50g

Standard accessories:

- Walther G22
- 2 magazines
- operating instructions
- key for trigger lock
- spacer 20
- spacer 10
- Allen screw
  M5x60; M5x35; M5x25
- Allen key M5
- Allen key M3
- open-end spanner SW13

Designation of components

Pos.	designation	article no.
1	butt, black	269 53 16
	butt, green	269 94 60
2	forend, black	269 53 24
	forend, green	269 94 78
3	upper part of butt, black	269 53 32
	upper part of butt, green	269 94 86
4	butt plate	269 53 41
5	backstrap	269 53 59
6	butt insert	269 53 67
7	sideplate	269 53 75
8	sideplate	269 53 83
9	disconnector	269 53 91
10	magazine catch carrier	269 54 01
11	hammer	269 54 13
12	sear	269 54 21
13	hammer strut	269 54 30
14	push rod	269 54 48
15	slide stop lever	269 54 56
16	hammer strut housing	269 54 64
17	disconnector spring	269 54 72
18	spring	269 54 81
19	spring	269 54 99
20	spring	269 55 02
21	spring	269 55 11
22	stove bolt	266 05 12
23	nut	269 55 29
24	sear pin	269 55 37
25	hammer pin	269 55 45
26	magazine guiding	269 55 53
27	allen screw, flat	269 55 61
28	spacer carrier	269 55 70
29	spacer 20	269 55 88
30	spacer 10	269 55 96
31	safety lever left	269 56 00
32	safety lever right	269 56 18
33	flat head bold M4x14	269 56 26

Pos.	designation	article no
34	threaded bushing	269 56 34
35	dowel pin	269 56 42
36	magazine catch pin	266 08 90
37	magazine safety	269 56 69
38	magazine holder plate	269 56 77
39	insert for cocking lever	269 56 85
40	insert for ejection port	269 56 93
41	ejection port frame	269 57 07
42	fixing bushing, rear	269 57 15
43	fixing bushing, front	269 57 23
44	allen screw flat	269 57 31
45	allen screw flat	269 57 40
46	allen screw flat	269 57 58
47	allen screw flat	269 57 66
48	key	269 57 74
49	straight pin	269 57 82
50	fixing counter bearing	269 57 91
51	straight pin	270 38 66
52	magazine safety spring	269 58 04
53	spring for bolt catch	269 58 12
55	simulating device	260 83 32
56	slide	269 58 21
57	breech housing	269 58 39
58	barrel retention	269 58 47
59	recoil buffer	269 58 55
60	ejector	269 58 63
61	extractor	269 58 71
62	firing pin	269 58 80
63	spring guidance rod	269 58 98
64	cocking lever	269 59 01
65	firing pin spring	269 59 10
66	main spring	269 59 28
67	screw	269 59 36
68	pin for breech housing	269 59 44
69	screw for cocking lever	269 59 52
70	dowel pin	269 59 61

Pos.	designation	article no
71	pin	266 09 20
72	spring	266 09 11
73	barrel 20” with tread	269 59 87
74	barrel nut	269 59 95
75	trigger carrier	269 60 02
76	trigger	269 60 11
77	trigger bar	269 60 29
78	trigger lock	269 60 37
79	spring	269 60 45
80	grub screw f.trigger carrier	269 60 53
81	safety	269 60 61
82	safety pin	269 60 70
83	safety marking	269 60 88
84	ball for safety lever	269 60 96
85	spring	269 61 00
86	open-end spanner SW13	269 61 18
87	magazine butt plate	269 61 26
88	follower	269 61 34
89	butt plate holder	269 61 42
90	magazine body	266 11 36
91	magazine button	266 11 52
92	magazine spring	269 67 38
93	front sight base	269 61 69
94	front sight	269 61 77
95	front sight 2	269 93 97
96	rear sight	270 38 74
97	sleeve, short	269 67 54
98	sleeve, long	269 67 46
99	flat head bold M4x12	270 43 07

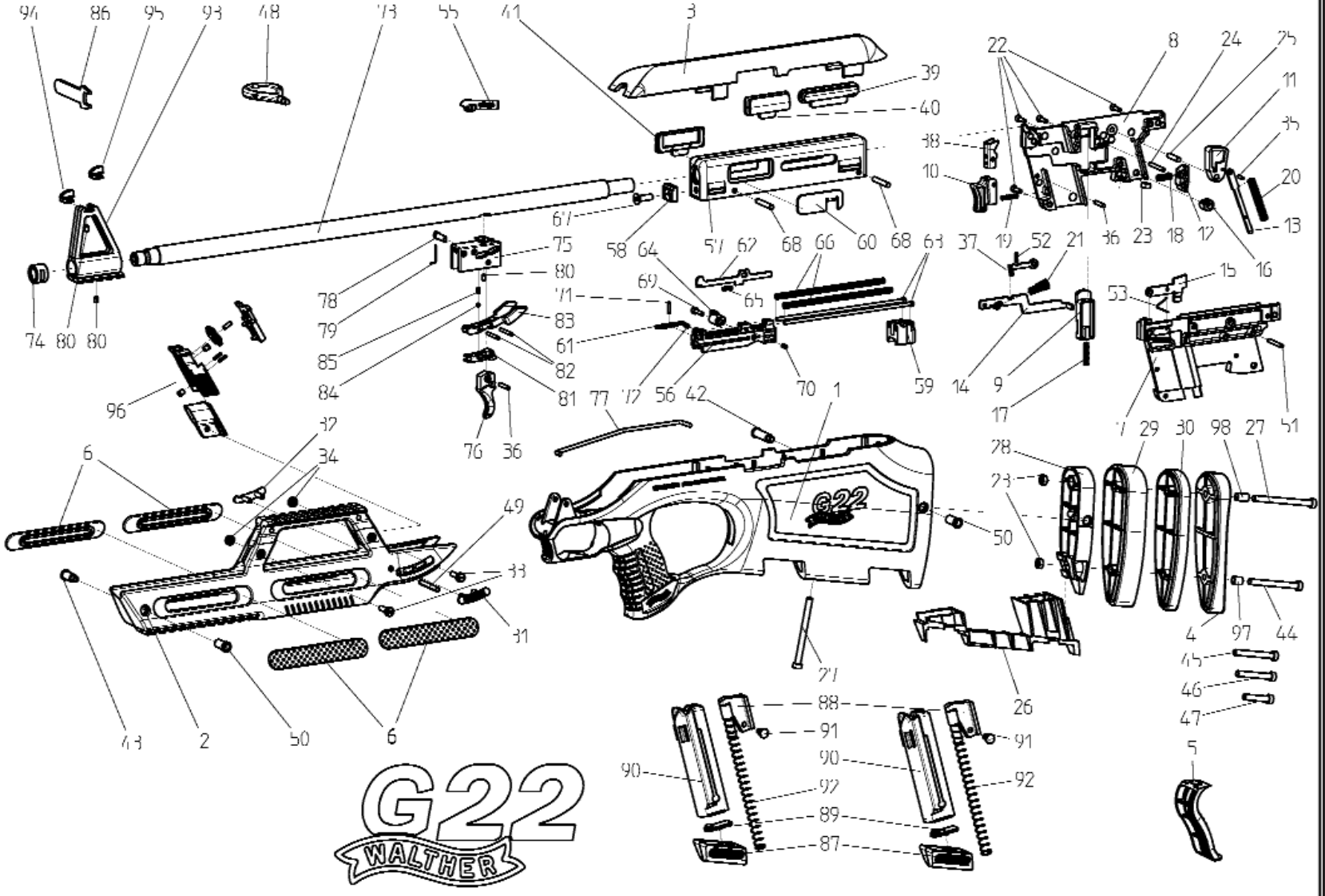
G22
WALTHER

Special accessories

Telescopic
(sight 3-9x40, reticle 8, illuminated dot)

article no.: 2.1501



Telescopic
(sight 3-9x40 RA, reticle Mil.Dot.)

article no.: 269 27 32

Silencer SD22

article no.: 267 61 33



Magazine, 10 rounds

article no.: 269 28 13



Magazine, 2 rounds
(not illustrated)

article no.: 269 44 84

Special accessories

Point Sight PS22
(with mounting)

article no.: 269 35 00



Tactical soft bag
(without accessories)

article no.: 269 27 59



Red Dot Top Point II
(with mounting rings)

article no.: 267 61 50



Rifle sling

article no.: 269 27 75



Laser

article no.: 269 27 41



Carl Walther GmbH - Sportwaffen

Marketing:
Vertrieb:
Postfach 2740
D - 59171 Arnsberg
Donnerfeld 2
D - 59757 Arnsberg

Tel. 02932 / 638 100
Fax 02932 / 638 149

Technik:
Service:
Postfach 4325
D - 89033 Ulm
Karlstraße 33
D - 89073 Ulm

Tel. 0731 / 1539 - 0
Fax 0731 / 1539 - 170

All technical changes and modifications reserved.
269 62 74.04-04.1,0.18
Jan 2005 - rev. A