M4 / M16
Self loading rifle
Cal. .22L.R.

USA



⚠ WARNING: READ THE INSTRUCTIONS AND WARNINGS IN THIS MANUAL CAREFULLY BEFORE USING THIS FIREARM.

SAFETY AND OPERATING INSTRUCTIONS

MADE BY CARL WALTHER

No.	Contents	Page
	Identification	1
	Safety Rules	3 - 11
1	Safety Operating Instructions	12
2	Inspection	13
3	Loading the Firearm	14
4	Insertion of the first Cartridge	14 - 15
5	Firing	15
6	Decocking the Hammer	15-16
7	Firearm with empty Magazine	16
8	Unloading	16
9	Clearing Misfires	17
10	Settings - Sights, Stock, Bolt Speed	17 - 19
11	Mounting a telescopic Sight	19
12	Field stripping the Firearm	19 - 20
13	Cleaning	20
14	Storage	20
15	Repair	21
16	Warranty	21 - 22
17	Technical Data	23
18	Exploded view / Parts	24 - 25
19	Variants / Accessories	26 - 27
	Contact	back

YOUR SAFETY RESPONSIBILITY

SAFETY IS YOUR NUMBER ONE RESPONSIBILITY!

AT HOME, IN THE FIELD, AT THE RANGE, OR ANYWHERE, THE FIRST CONCERN OF EVERY FIREARM OWNER SHOULD BE SAFETY. APPLY THE FOLLOWING SAFETY RULES IN EVERY SITUATION, WITH ANY KIND OF FIREARM.

⚠ WARNING:

YOU MUST FOLLOW ALL OF THESE SAFETY RULES TO ENSURE THE SAFE USE OF YOUR FIREARM

⚠ WARNING:

SAFE GUN HANDLING IS YOUR PERSONAL RESPONSIBILITY!

⚠ WARNING:

SAFE USE OF A FIREARM IS YOUR PERSONAL RESPONSIBILITY AND THE FAILURE TO FOLLOW ALL OF THESE BASIC SAFETY RULES MAY RESULT IN SEVERE PERSONAL INJURY OR DEATH TO YOU OR OTHERS. YOU ARE THE MOST IMPORTANT SAFETY DEVICE WHEN IT COMES TO THE USE OF YOUR FIREARM. CARL WALTHER GMBH AND UMAREX USA WILL NOT BE RESPONSIBLE FOR ANY PERSONAL INJURY, DEATH OR PROPERTY DAMAGE THAT RESULTS FROM:

(1) THE CRIMINAL OR NEGLIGENT USE OF THIS FIREARM;
(2) A DISREGARD OF THESE SAFETY INSTRUCTIONS AND WARNINGS;
(3) IMPROPER OR CARELESS HANDLING OF THIS FIREARM;
(4) THE USE OF NON-STANDARD, DEFECTIVE, IMPROPER OR RELOADED AMMUNITION; OR
(5) IMPROPER OR NEGLIGENT MODIFICATIONS OR REPAIR TO THE FIREARM.

- **SAFE GUN HANDLING IS YOUR PERSONAL RESPONSIBILITY** at all times.
  Firearms are dangerous and can cause serious injury or death if they are misused or used inappropriately. Safety must be the first consideration of anyone who owns or handles firearms.

- **YOU ARE RESPONSIBLE FOR FIREARM SAFETY AT ALL TIMES.**
  You must undertake full-time responsibility for your firearm`s safety and security. You must protect yourself and all others against injury or death from misuse of the firearm

- **SAFE FIREARM STORAGE IS YOUR RESPONSIBILITY.**
  You must secure firearms safely from children and unauthorized users. A lock has been provided for use with this firearm.
  Never assume that the use of this lock is sufficient to safely secure your firearm. You must always evaluate your personal situation and employ the security system(s) that meet your needs and prevent children and unauthorized user from gaining access to your firearm.

- Accidents are the result of violating the rules of safe gun handling and common sense.

- For your safety and the safety of others, **NEVER RELY ON MECHANICAL FEATURES ALONE.**
  Only your safe gun handling habits will ensure the safe use of the firearm.
  This is your responsibility.

- **NEVER KEEP AMMUNITION IN THE SAME LOCATION AS THE FIREARM.**
  Store in a separate and secure place.

- **DO NOT ALTER, MODIFY OR REPLACE ANY OF THE PARTS OF THE INTERNAL COMPONENTS OF YOUR FIREARM**
  All work must be performed by a qualified gunsmith. If you do otherwise, improper functioning may occur and serious injury may result.

- **NEVER MANIPULATE, ADJUST OR CHANGE ANY OF THE INTERNAL COMPONENTS OF YOUR FIREARM**
  including the firing pin, sear, or drawbar. Improper manipulation of any internal component may affect the safety and reliability of your firearm and may cause serious injury.

- **READ AND UNDERSTAND THESE INSTRUCTIONS BEFORE USING YOUR FIREARM**
  WARNING: THE FAILURE TO FOLLOW THESE BASIC FIREARM SAFETY RULES MAY RESULT IN AN UNINTENDED DISCHARGE WHICH COULD CAUSE SERIOUS PERSONAL INJURY OR DEATH TO YOU AND OTHERS.

- **BEFORE HANDLING ANY FIREARM, UNDERSTAND ITS OPERATION.**
  Not all firearms are the same. Familiarize yourself with the mechanical features of any firearm you intend to use. If you feel uncertain about any operational aspects of your firearm, please contact Umarex USA before proceeding with its operation.

- **ALWAYS SAFELY STORE AND SECURE YOUR FIREARM.**
  Safe and secure storage of your firearm is one of the most important responsibilities of firearm ownership. It is a full-time responsibility. You must always secure your firearm and ammunition separately so that they are not accessible to children or other unauthorized persons. (See Safe Storage Instructions in this manual).

- **ALWAYS KEEP YOUR FIREARM POINTED IN A SAFE DIRECTION.**
  Never point at anyone or anything you do not intend to shoot whether or not the firearm is loaded. This is particulary important when loading, unloading, or field stripping the gun. ALWAYS control the direction of the muzzle.

- **NEVER PLACE YOUR FINGER ON THE TRIGGER OR INSIDE THE TRIGGER GUARD UNLESS YOU INTEND TO FIRE.** Ensure that other objects do not touch the trigger.

- **ALWAYS BE SURE OF YOUR TARGET AND WHAT IS BEYOND IT.**
  Always be sure of where the bullet will strike and shoot only where there is a safe backstop free of obstructions, water or other surfaces which can cause ricochets. Think of what the bullet may hit if it misses the target or ricochets. Do not fire into the sky.

- **NEVER DISASSEMBLE YOUR FIREARM OR MANIPULATE THE INTERNAL COMPONENTS OF YOUR FIREARM**
  beyond the field stripping procedure outlined in this manual. Improper disassembly or manipulation of your firearm may be dangerous and can lead to serious injury or death.

- **NEVER CARRY OR STORE A FIREARM** with the hammer or striker in the cocked position.

- **NEVER ALLOW YOUR FIREARM TO BE USED BY INDIVIDUALS WHO HAVE NOT READ OR DO NOT UNDERSTAND THESE FIREARM SAFETY RULES**

- **BE SURE ALL ACCESSORIES, SUCH AS HOLSTERS AND GRIPS, ARE COMPATIBLE** with the firearm and that the accessories do not interfere with the safe operation.

- **ALWAYS USE THE CORRECT AMMUNITION FOR YOUR PARTICULAR FIREARM** as indicated by the marking on the barrel or receiver. Never use non-standard, reloaded, or “handloaded” ammunition which has not been subjected to internal ballistic pressure testing.

- **ALWAYS HAVE ADEQUATE VENTILATION.** Discharging firearms in poorly ventilated areas, cleaning firearms, or handling ammunition may result in exposure to lead and other substances known to cause birth defects, reproductive harm, and other serious physical injury. Review the warning and labels for all ammunition and cleaning products carefully.

- **NEVER USE ALCOHOL OR DRUGS BEFORE OR WHILE SHOOTING.** Do not use your firearm if you are on any medication which impairs, even slightly, your mental physical ability.

- **ALWAYS WEAR EYE AND HEARING PROTECTION SPECIFIED FOR FIREARM USE** every time you discharge your firearm. Make sure others in the vicinity of where you will be shooting wear protection as well.

- **NEVER ALLOW ANY ALTERATION OR REPLACEMENT OF PARTS IN YOUR FIREARM UNLESS PERFORMED BY A QUALIFIED GUNSMITH.** If you do otherwise, improper functioning of your firearm may occur and serious injury or death may result.

- **NEVER CROSS OBSTACLES SUCH AS FENCES OR STREAMS WITH A LOADED FIREARM.**

- Firearm safety training is available. Contact your dealer, law enforcement agency, local sportman`s club, or the NRA for availability.

- **APPROPRIATE USE FOR YOUR FIREARM MEANS USING YOUR FIREARM FOR LEGAL PURPOSES.**

SAFE STORAGE & TRANSPORTATION



⚠ WARNING:

SAFE AND SECURE STORAGE OF YOUR FIREARM IS ONE OF THE MOST IMPORTANT RULES OF FIREARM SAFETY. YOUR FAILURE TO FOLLOW THESE RULES MAY RESULT IN SERIOUS INJURY OR DEATH TO YOU OR OTHERS.

- You must always secure your firearm and ammunition separately so that they are not accessible to children or other unauthorized persons.

- Safe and secure storage and transportation of your firearm is your responsibility. It is a full-time responsibility.

- **YOU SHOULD ALWAYS SECURE YOUR FIREARM IN A MANNER THAT WILL PREVENT UNAUTHORIZED ACCESS. ALWAYS STORE YOUR FIREARM UNLOADED.**
  Your firearm and ammunition should be stored separately and in a manner inaccessible to children and unauthorized persons.

- **ALWAYS MAKE CERTAIN THAT YOUR FIREARM IS SAFELY SECURED IN A MANNER SO AS TO PREVENT UNAUTHORIZED ACCESS TO THE FIREARM. CARL WALTHER HAS PROVIDED A LOCK FOR THIS PURPOSE.**
  Please read and follow the instructions for the use of this lock. There are other alternative locks and safe storage containers available in the marketplace which may be appropriate for your particular needs. Consult your local gunshop, hardware store or local police department for guidance on the variety of other safe storage devices or practices which may be appropriate for your particular needs. By purchasing this firearm you have taken on the responsibility of safely securing the firearm at all times and preventing its unauthorized use. Never assume that the use of only a lock is sufficient to safely secure your firearm. It is your personal responsibility to select and use whatever measure or practices that will best enable you to be absolutely certain that your firearm is secure at all times.

You are responsible to determine witch devices or practices are appropriate for the safe storage of your firearm and your ammunition.

⚠ WARNING: **NEVER LOCK A LOADED FIREARM AND NEVER LOAD A LOCKED FIREARM**

- **NEVER ASSUME THAT A ``HIDING`` PLACE IS A SECURE STORAGE METHOD.**
  Others may be aware of your storage location or come upon it by chance. It is your personal responsibility to use common sense when storing and securing your firearm and ammunition and to always make sure that it is not accessible to children or other unauthorized persons. Always make sure your firearm is unloaded before storing.

- **ALWAYS FOLLOW THE LAW!!**
  You must be familiar with all local, state, and federal laws regarding the safe discharge, storage and transportation of your firearm. Failure to know and follow the law may result in unauthorized access or use of your firearm by another. Obey all laws relating to the storage and transportation of firearms. Your local police department or gunshop will furnish you with available information on storing and/or transporting a firearm legally.

- **NEVER TRANSPORT A LOADED FIREARM.**
  When transporting your firearm, be sure it is unloaded and the cylinder or action is open.

- **YOUR FIREARM IS YOUR RESPONSIBILITY.**
  Protect your firearm from theft or misuse by untrained or unqualified individuals.

PREPARATION FOR FIRING

⚠ WARNING: **THE FAILURE TO FOLLOW THESE FIREARM SAFETY REQUIREMENTS WILL CAUSE SERIOUS INJURY OR DEATH TO YOU OR OTHERS.**

- **ALWAYS WEAR ADEQUATE AND PROPER EAR PROTECTION SPECIFIED FOR FIREARM USE** to prevent permanent damage to your hearing. Make sure others who are nearby are wearing ear protection as well.

- **ALWAYS WEAR SAFETY GLASSES SPECIFIED FOR FIREARM USE,** whether indoors or out. Safety glasses should protect your eyes from the firing flash and particles associated with the discharge of ammunition. Failure to do so creates a risk of personal injury from particle or debris spitting or ricochets.

- **NEVER SHOOT AT HARD SURFACES, WATER OR UP INTO THE SKY.**
  Always select a place to shoot that has a safe backstop and is free from obstruction and water surfaces which cause ricochets.

- **ALWAYS BE AWARE OF PEOPLE AROUND YOU** so that persons cannot accidentally walk into the line of fire.

- **ALWAYS POSITION THE SHOOTER SO THAT ALL OTHERS ARE OUT OF THE LINE OF FIRE**
  and are not within an area where they may be struck by ricochets, or by ejected cases from other types of firearms.

- **ALWAYS KEEP FINGERS AND OTHER PARTS OF YOUR BODY AWAY FROM THE MUZZLE AND AWAY FROM THE FIREARM BOLT AND EJECTION PORT.**

- **ALWAYS BE ALERT AND ALWAYS FOLLOW THE SAFETY INSTRUCTIONS OF FIRING RANGE OFFICER.**

- **ALWAYS BE SURE THAT ALL ACTIONS OF FIREARMS ARE OPEN, THAT CHAMBERS ARE CLEAR OF AMMUNITION, MAGAZINES ARE REMOVED, AND THE FIREARM IS POINTING IN A SAFE DIRECTION.**

- **ALWAYS BE ALERT.**
  Never shoot if you are tired, cold or impaired in any way.

- **ALWAYS TREAT YOUR FIREARM AS IF IT WERE LOADED.**

- **NEVER USE ALCOHOL OR DRUGS BEFORE OR WHILE SHOOTING.**

AMMUNITION

A GENERAL PRINCIPLES

- There are different types of ammunition for different types of firearms. Your firearm has been designed for ammunition of a specific type and a specific caliber. It is important to select the proper ammunition for your firearm.

⚠ WARNING:

NEVER USE AMMUNITION NOT SPECIFICALLY DESIGNATED FOR USE IN YOUR FIREARM. FAILURE TO USE THE CORRECT TYPE OR CALIBER OF AMMUNITION MAY CAUSE THE FIREARM TO JAM, FAIL TO FIRE OR EVEN GENERATE EXCESSIVE PRESSURE WHICH CAN DAMAGE OR EVEN RUPTURE YOUR FIREARM, CAUSING PERSONAL INJURY, DEATH OR PROPERTY DAMAGE.

- You are responsible for selecting ammunition that meets industry standards and is appropriate in type and caliber for this firearm.

- Locate the caliber designation marked on the left side of the lower receiver. This information indicates the ammunition caliber that should be used in this firearm.

B HANDLOADED OR RELOADED AMMUNITION

⚠ WARNING:

NEVER USE NON-STANDARD, RELOADED OR ``HANDLOADED`` AMMUNITION WHICH HAS NOT BEEN SUBJECTED TO INTERNAL BALLISTIC PRESSURE TESTING. RELOADED OR HANDLOADED AMMUNITION MAY HAVE MANY MANUFACTURING AND QUALITY VARIABLES (SUCH AS THE TYPE AND AMOUNT OF GUN POWDER). ANY AMMUNITION THAT IS IMPROPERLY MANUFACTURED, EVEN IN THE SLIGHTEST DEGREE, MAY FAIL TO FIRE OR MAY GENERATE EXCESSIVE INTERNAL PRESSURES WHICH CAN DAMAGE OR EVEN RUPTURE THE FIREARM, CAUSING PERSONAL INJURY OR DEATH TO THE SHOOTER OR THOSE IN THE IMMEDIATE VICINITY.

- Use only commercially manufactured ammunition with internal ballistic pressure which are in strict accordance with the specifications of the Sporting Arms and Ammunition Manufacturers´ Institute (SAAMI). If you are uncertain, contact your ammunition supplier for verification.

C AMMUNITION SPECIFICS

- Use only ammunition specifically recommended for your firearm.
- Never mix ammunition.
- Never use a cartridge not specifically designated for use in your firearm.
- Pressure from the wrong type of ammunition may exceed the capability of your firearm and may damage or even rupture your firearm.

- In some cases, a round of ammunition not specified on your firearm may fit into the chamber. Firing ammunition not specified on your firearm may cause it to rupture and cause serious injury or death to you or others.

- Always inspect your ammunition before using it. Never use dirty, corroded or damaged ammunition which can lead to a burst cartridge which may cause damage to the firearm and personal injury or death.

⚠ WARNING: .22 L.R. caliber cartridges have a wide range of loads, from very weak for sport shooting and maximum precision to very powerful for a high projectile velocity. To ensure reliable operation, a semiautomatic firearm must be matched to a certain cartridge load. For this reason the .22 L.R. Colt M16 / M4 has been designed for high-quality standard ammunition and HV (High Velocity) ammunition, and one can be sure of trouble-free operation only with these types.

⚠ WARNING: **Always leave the manual safety engaged (on "SAFE") until you intend to fire.**

1 Manual Safety

SAFE POSITION - turn the safety lever to the right so the word "SAFE" is visible (fig. 1).

FIRE POSITION - turn the safety lever to the left so the word "FIRE" is visible (fig. 2).

On the right side of the firearm you also have an indicator for the position of the manual safety (fig. 3 and 4).

⚠ WARNING: **NEVER RELY SOLELY ON MECHANICAL FEATURES ALONE - always be extremely careful, use safe gun handling practices, and avoid situations which could lead to an accident.**

fig. 1 Manual safety in "SAFE" position



fig. 2 Manual safety in "FIRE" position



fig. 3 Manual safety in "SAFE" position



fig. 4 Manual safety in "FIRE" position



⚠ WARNING: **Always inspect the chamber of your firearm after the magazine has been removed from the gun. Make sure that no cartridge is left in the chamber.**

2 Inspection

⚠ WARNING: **Make sure that the firearm is unloaded (chamber cleared, barrel clear of any obstructions, magazine empty) for inspection and that the safety is in the safe position and the muzzle is pointed in a safe direction.**

⚠ WARNING: **Never put your hand in front of the muzzle.**

CAUTION: **Make sure that the firearm is unloaded (chamber cleared, barrel clear of any obstructions, magazine empty)!**

Functional Inspection:

1. Bolt movement: Remove the magazine and retract the bolt by pulling back the charging handle. Release the charging handle to return the bolt fully forward into battery.

2. Bolt catch: Insert the empty magazine, retract the bolt by pulling back the charging handle. The bolt locks back in rearmost position.

3. Decocking: **Make sure that the firearm is unloaded (chamber cleared, barrel clear of any obstructions, magazine empty)!** Make sure the muzzle is pointed in a safe direction. Pull the trigger. The hammer drops in decocked position.

3 Loading the firearm

Press magazine release and remove empty magazine (fig. 5). Use the side-mounted button to push the follower down. Insert the cartridge under the magazine lips, at the same time pushing down the follower (fig. 6). Do not use excessive force. Insert the loaded magazine until the magazine catch locks it in position (fig. 7).


fig. 5


fig. 6


fig. 7

⚠ WARNING: Make sure that the firearm is unloaded (chamber cleared, barrel clear of any obstructions, magazine empty) for inspection and that the safety is in the safe position and the firearm is pointed in a safe direction.

4 Loading the chamber with the first cartridge

Pick up the firearm with your shooting hand and point the muzzle in a safe direction. Use your other hand to retract and release the bolt with the help of the charging handle (fig. 8). Never put your hand in front of the muzzle. As the bolt travels forward it inserts the first round into the chamber. The hammer is now cocked. Leave the safety in the safe position until you are ready to fire.

⚠ WARNING: Never put your hand in front of the muzzle.

⚠ WARNING: Always load a round into the chamber by feeding it from the magazine. Failure to follow this warning can result in severe injury or death to you or others. Never attempt to load the firearm by inserting a round into the open ejection port.

⚠ WARNING: **Colt M4/M16 cal. .22L.R. are designed so that they are able to fire when the magazine is removed. Therefore, if the magazine is removed from the firearm and there is a loaded round in the chamber, it will fire if the trigger is pulled. After inserting a magazine, always test to make sure it is locked in place by applying some removal pressure to the magazine.**

⚠ WARNING: **Your firearm is now ready to fire. Keep your finger off the trigger and out of the trigger guard until you are ready to fire.**

fig. 8



5 Firing

Grasp firearm with one hand on forearm and other hand on grip with index finger resting along outside of trigger guard. Raise firearm and pull buttstock firmly into shoulder.

Aim at a safe target. Push the manual safety to the fire position. Squeeze the trigger slowly and maintain the pressure until the round is fired.

fig. 9



Your firearm loads immediately after firing.
- You may continue to fire by pulling and fully releasing the trigger until the magazine is empty
- If you wish to stop, release trigger, remove finger from triggerguard, and set saftey selector to “SAFE” position. If you have fired the last round from the magazine, the bolt will be held in the rearmost position so that the firearm can quickly be reloaded by replacing the magazine, or the chamber can be inspected to ensure it is empty.

6 Decocking

- If you decide not to fire after the hammer has been cocked or if you decide to suspend firing, keep the firearm pointed in a safe direction.
- Remove your finger from within the trigger guard.
- Place the manual safety in the “SAFE” position and remove the magazine.
- Pull charging handle rearward to eject any remaining cartridge(s).

- Make sure that the firearm is unloaded (chamber cleared, barrel clear of any obstructions, magazine empty)!
- You must be certain there is no cartridge in the chamber or obstructions in the barrel. Remember that any time you release the bolt while a magazine containing cartridges is in the firearm, you will have reloaded the firearm and it will be capable of firing.
- Place the manual safety in the “FIRE” position (fig. 10).
- Squeeze trigger to decock the firearm.
- The firearm may now be transported safely.

fig. 10 Manual safety in “FIRE” position



Note: The bolt catch lever does not function. The gun has an internal bolt catch. To put the bolt into its forward position insert a loaded magazine and retract the charging handle or retract the charging handle without the magazine installed.

⚠ WARNING: Keep the firearm pointed in a safe direction when decocking. Failure to do this can result in serious injury or death.

7 Firearm with empty magazine

After the last round has been fired, the bolt catch holds the bolt in the open position (fig. 11). Place the manual safety in the “SAFE” position.

fig. 11



Continue shooting - Replace the empty magazine with a full one. Pull bolt rearward and release with the help of the charging handle (fig. 8), the bolt will travel forward and load the chamber with the first round. Keep your firearm in your shooting hand, finger off the trigger and pointed in a safe direction so that there is no danger to other persons.

Discontinue shooting - Remove magazine and inspect the chamber, to verify it does not contain any ammunition (fig. 9). Close the bolt and decock hammer as described in section 6.

8 Unloading

Point the muzzle in a safe direction. Remove the magazine. Ensure that the chamber is empty by pulling back the charging handle to visually inspect the chamber (fig. 9). Keep firearm pointed in a safe direction. Retract the charging handle so that the bolt moves into battery. Push the manual safety to the “FIRE” position (fig. 10) and squeeze trigger to decock the firearm. The firearm may now be carried safely.

⚠ WARNING: Keep the firearm pointed in a safe direction when unloading. Failure to do this can result in serious injury or death.

9 Clearing misfires

⚠ WARNING: If your firearm gives any indication that it is not performing properly or the operation of your firearm has changed "the way it feels or sounds", stop firing. Make sure the firearm is pointed in a safe direction, unload the firearm and have it inspected and test fired by a gunsmith qualified to perform service on COLT M16/M4 rimfire rifles made by Carl Walther.

- If a cartridge fails to fire, wait 30 seconds while keeping the muzzle pointed in a safe direction.
- Keep your finger off the trigger and out of the trigger guard.
- Place the manual safety in the "SAFE" position and remove the magazine.
- Grasp the bolt with the charging handle and briskly pull it fully rearward to eject the misfired round. Check the barrel chamber and bore visually for any obstructions. Never look down the barrel from the muzzle end.
- You must be certain there are no cartridges in the chamber or obstructions in the barrel. Remember that any time you release the bolt while a magazine containing cartridges is in the firearm, you will have reloaded the firearm and it will be capable of firing.

Note: The forward assist plunger does not function. In case of feeding failures, retract the charging handle to extract the damaged round.

⚠ WARNING: Never try to use a misfired cartridge again.

10 Settings

10.1 Setting the dual aperture rear sight

The dual aperture rear sight can be adjusted for two target ranges by flipping it foward or backward.

Short Range - The larger aperture is used for 0 - 200 yards range (0-200 meter) (fig. 12).

Normal Range - The smaler aperture is used for over 200 yards (200 meters) range (fig. 13).

fig. 12

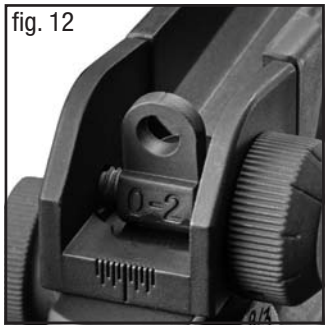

fig. 13

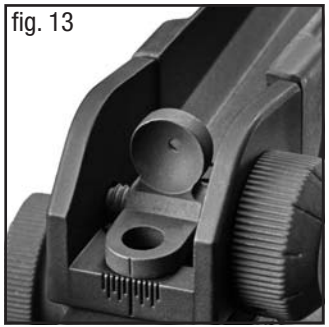

10.2 Setting of the rear sight

The **elevation** is adjusted using the elevation knob below the rear sight (fig. 14). Turning the knob adjusts elevation up or down. Amount of adjustment is defined by a click when the knob is turned.

The **windage** is adjusted using the windage knob on the side of the rear sight (fig. 15). Turning the knob adjusts for windage left or right. Amount of adjustment is defined by a click when the knob is turned.

Note: Because this is a replica, the markings on the elevation and windage knobs are not set for .22 LR ammunition.

fig. 14



fig. 15

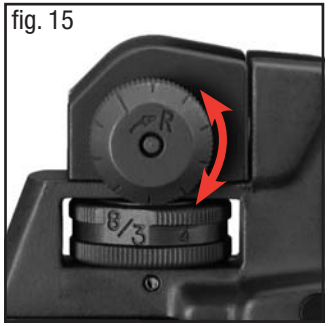

10.3 Setting of the front sight post

The **elevation** is adjusted by pushing in the front sight post detent near the front sight post (fig. 16) and simultaneously turning the front sight post in desired position.The front sight post must be engaged in one of the 4 detents (fig 17).

NOTE: Adjustment of the front sight post is for initial zeroing of the rifle. For all future elevation adjustments use the rear sight.

fig. 16



fig. 17



10.4 Setting of the retractable stock (Models M4 Carbine; M4 OPS only)

On the Variants M4 Carbine and M4 OPS the buttstock can be adjusted in its length. Pushing the buttstock latch allows the buttstock to be adjusted to various lengths (fig. 18).

fig. 18

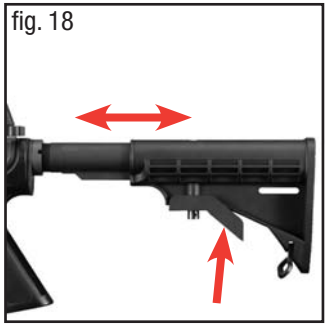

10.5 Setting of the bolt speed

The bolt speed can be adjusted for different ammunition requirements. To reach the screw for bolt speed adjustment the gun has to be disassembled as described in Section 12 Field Stripping (fig.19). Only adjust the bolt speed if problems are encountered when firing a different type of ammunition.

For high velocity ammunition, use the correct size Allen wrench (hex key) to reduce the bolt speed by turning the screw clockwise (fig. 19).

For standard ammunition, use the correct size Allen wrench (hex key) to increase the bolt speed by turning the screw counter clockwise (fig. 19). The screwhead must not rise out of, or be removed from the gun.

11 Mounting an optical sight

To mount an optical sight, the carry handle can be removed by loosing the nuts on the left side of the carry handle (fig. 20). This will provide a mil-standard rail for mounting of optics.

12 Field stripping

⚠ WARNING: Always follow the disassembly instructions exactly. Never do anything beyond what you are specifically instructed to do in this manual. Never alter or modify the parts in your firearm.

⚠ WARNING: Always wear eye protection that is specified for use with firearms, every time you handle your firearm for cleaning and maintenance.

⚠ WARNING: Prior to disassembly, place the manual safety in the safe position, take out the magazine and check that the firearm is not loaded.

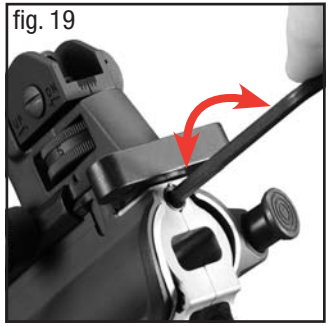
fig. 19

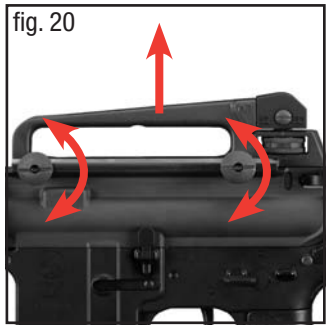
fig. 20


fig. 21

To disassemle insert an empty magazine, pull back the bolt to its rearmost position with the charging handle. Remove the magazine for further disassembly. The gun can be opened by pushing the rear receiver pin out of the gun to the right (fig. 21; 22). Do not use excessive force. There are 5 false/dummy pins (3 left side (fig. A), 2 right side (fig.B)). Do not try to tap them out. Doing so will damage your firearm and will void your warrenty.

fig. 22



NOTE: Further disassembly is not necessary or recommended and will void your warranty.

fig. A

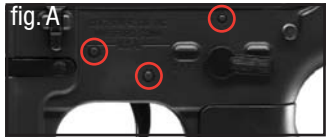

fig. B



13 Cleaning

In order to keep the firearm functional and to extend its service life, the firearm should be cleaned and maintained at regular intervals.

⚠ WARNING: Place the manual safety in the "SAFE" position, remove the magazine, open the bolt, and inspect the chamber to make sure it is empty.

Remove fouling from breech, magazine lips, follower, and receiver with a brush and a cloth. Clean the barrel with bore solvent and a brush and then dry it with cleaning patches; always begin at the chamber. Repeat until barrel is clean. Apply a thin coat of oil to all metal parts. Reassemble firearm and check for proper function.

14 Storage

⚠ WARNING: Never leave a loaded firearm unattended!

Always keep and store your firearm in an unloaded condition with the safety in the "SAFE" position. Keep the firearm and ammunition away from children and unauthorized persons. Firearms should be stored separately from ammunition. The ejection port cover is without function. Always store your firearm with the simulating device in the chamber to make sure no cartrige is loaded (fig. 23).

fig. 23



15 Repair

Do not return defective or damaged product to the dealer. If your firearm needs repair, call Umarex USA (479) 646-4210 and ask for the Service Department or visit www.Colt22Rimfire.com.

⚠ WARNING: Only an authorized and qualified gunsmith should inspect and repair your firearm!

16 Warranty

LIMITED ONE YEAR WARRANTY

This product is warranted to the original owner for 1 year from date of purchase against defects in material and workmanship and is not transferable.

WHAT IS COVERED
Replacement parts and labor.

WHAT IS NOT COVERED
Parts, labor, and shipping charges related to to Umarex USA for defective product and damages caused by abuse or failure to perform normal maintenance as well as any other expense. Consequential damages, or incidental expenses, including damage to property. Umarex USA will not be responsible for unauthorized adjustments or modifications, use of defective or improper ammunition, corrosion, criminal misuse, negligence, resale, and/or use under the influence of drugs or alcohol. Some states do not allow the exclusion or limitation of incidental or consequential damages, so the above limitation or exclusion may not apply to you. Umarex USA reserves the right to determine what constitues ordinary wear and tear.

WARRANTY CLAIMS
Warranty Claims and Repair for U.S. customers. Call Umarex USA (479)-646-4210 and ask for the Service Department. If it is determined a return is necessary, you will be issued a Return Authorization Number. Write this number boldly on the box and return the product prepaid to Umarex USA. Your name, address, phone number and a note with the model number, serial number, and explanation of the defect found must be included in the package. A copy of the original purchase receipt must accompany the return.

IMPLIED WARRANTIES

Any implied warranties, including the implied warranties of merchantability and fitness for a particular purpose, are limited in duration to 1 year from date of retail purchase. SOME STATES DO NOT ALLOW LIMITATIONS ON HOW LONG AN IMPLIED WARRANTY LASTS, SO THE ABOVE LIMITATIONS MAY NOT APPLY TO YOU. TO THE EXTENT ANY PROVISION OF THIS WARRANTY IS PROHIBITED BY FEDERAL STATE, OR MUNICIPAL LAW WHICH CANNOT BE PREEMPTED, IT SHALL NOT BE APPLICABLE. THIS WARRANTY GIVES YOU SPECIFIC LEGAL RIGHTS, AND YOU MAY ALSO HAVE OTHER RIGHTS WHICH VARY FROM STATE TO STATE AND COUNTRY TO COUNTRY.

UNDER NO CIRCUMSTANCES SHALL UMAREX USA AND CARL WALTHER GMBH BE RESPONSIBLE FOR INCIDENTAL OR CONSEQUENTIAL DAMAGES WITH RESPECT TO ECONOMIC LOSS, INJURY, DEATH OR PROPERTY DAMAGE, WHETHER AS A RESULT OF BREACH OF THIS WARRANTY, NEGLIGENCE OR OTHERWISE.

Note: All liability is excluded in the event that the instructions and warnings in this manual are not observed.

SHIPPING GUIDELINES

- Ensure that the firearm is unloaded.
- Do not attempt to ship a firearm via US Postal Service; only federally licensed firearm dealers may ship a firearm by US Postal Service.
- DO NOT SHIP ANY AMMUNITION.
- Enclose a letter which includes your full name and address (no P.O. Boxes, please), daytime telephone number, e-mail address, the serial number of the firearm, and details of the problem experienced (stating the brand and type of ammunition used when the problem occurred) or work desired.
- Record the serial number before shipping, in case you wish to check on the repair status of your firearm.
- Please remove all custom parts and accessories, such as stocks, special sights and scopes, or slings from your firearm before returning.
- Place the firearm in its original case or in a similarly secure container and pack it securely.
- The package must NOT bear any markings which indicate the identity of the contents.
- It is recommended that shipments be insured by the owner, since Umarex USA will accept no responsibility for loss or damage in transit.
- It is most important that you comply with federal, state, and local laws and regulations. The following guidelines are meant to help, but you must seek assistance from the appropriate authorities if necessary.
- If your firearm must be replaced, it may be necessary to ship the replacement to a dealer rather than directly to you. You will be requested to furnish a signed FFL (Federal Firearms License) from your dealer in such an instance.

17 Technical Data

	M4 Carbine	M16 Rifle	M4 OPS	M16 SPR
caliber	.22 L.R.	.22 L.R.	.22 L.R.	.22 L.R.
action	blowback	blowback	blowback	blowback
trigger	single stage trigger	single stage trigger	single stage trigger	single stage trigger
trigger pull	6.6 - 9.9 lbs (3500-4500g)	6.6 - 9.9 lbs (3500-4500g)	6.6 - 9.9 lbs (3500-4500g)	6.6 - 9.9 lbs (3500-4500g)
magazine capacity	30 rounds	30 rounds	30 rounds	30 rounds
dimensions (L/H/W)	31.1 - 34.4 / 9.1 / 2.6 inch (790 - 875 / 230 / 65mm)	39.8 / 9.1 / 2.6 inch (1010 - 875 / 230 / 65mm)	31.1 - 34.4 / 9.1 / 2.6 inch (790 - 875 / 230 / 65mm)	39.8 / 9.1 / 2.6 inch (1010 - 875 / 230 / 65mm)
barrel length	16.2 inch (412mm)	21.2 inch (538mm)	16.2 inch (412mm)	21.2 inch (538mm)
sight radius	14.8 inch (375mm)	20.1 inch (510mm)	14.8 inch (375mm)	20.5 inch (520mm)
diameter of rear sight aperture	0.06 / 0.2 inch (1.65 / 5.25mm)	0.06 / 0.2 inch (1.65 / 5.25mm)	0.06 / 0.2 inch (1.65 / 5.25mm)	0.06 / 0.19 inch (1.65 / 4.9mm)
front sight width	0.08 inch (2mm)	0.08 inch (2mm)	0.08 inch (2mm)	0.08 inch (2mm)
weight w/out mag	6.0 lbs (2750g)	6.5 lbs (2950g)	5.9 lbs (2700g)	6.5 lbs (2950g)
magazine weight (empty)	4.2 ounce (120g)	4.2 ounce (120g)	4.2 ounce (120g)	4.2 ounce (120g)

18 Exploded view/ Parts
18.1 Exploded view

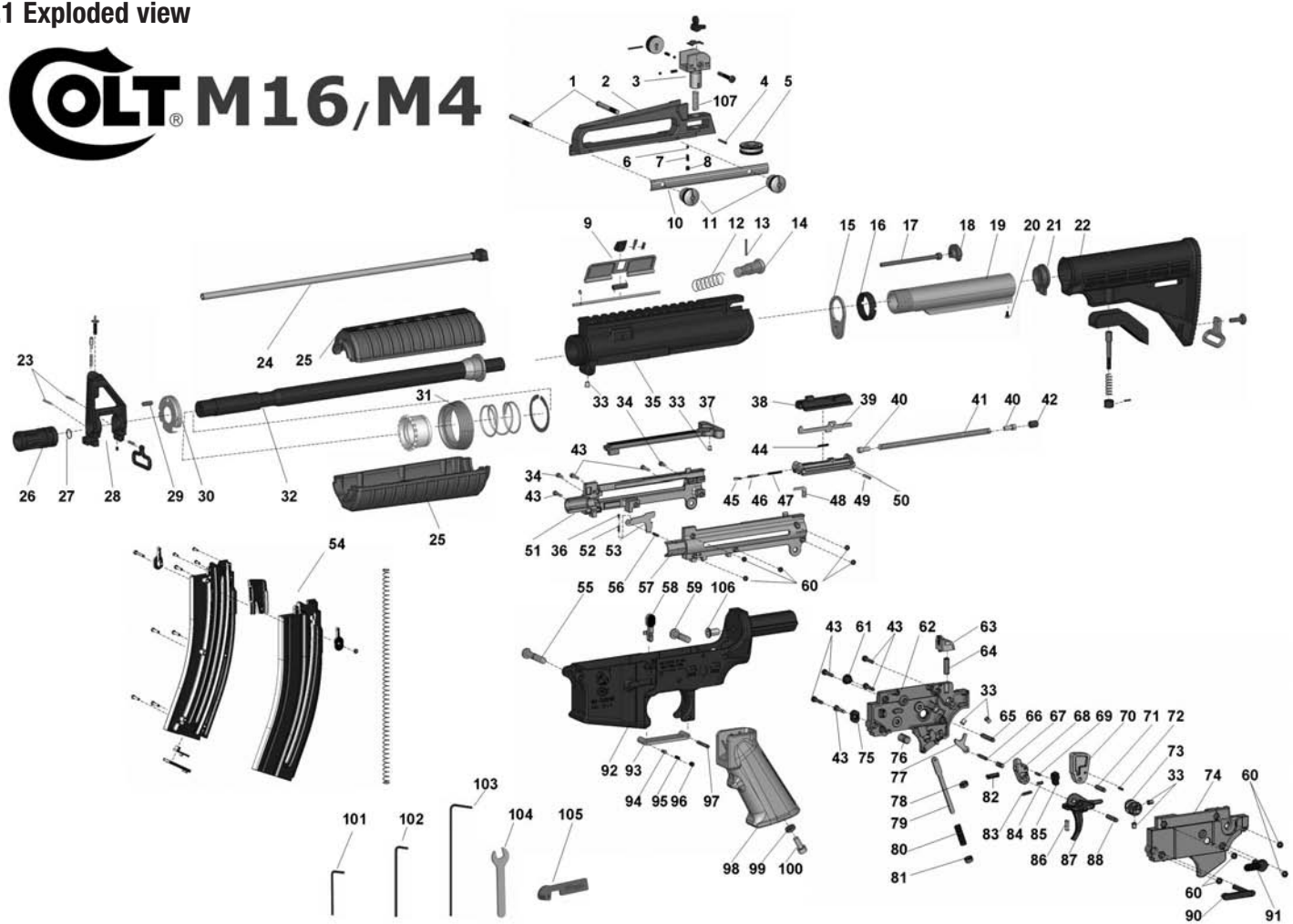

18.2 Parts

1	576.70.02.1	Bolt
2	2245117	Carry Handle
	576.70.01.1	Carry Handle M4 Carb., M16 Rifl.
	2245121	Tactical Rear Sight
	576.71.01.1	Sight Base M4 OPS
3	576.70.05	Rear Sight
	2245122	Flip up rear sight
4	576.70.15.3	Pin
5	576.70.12.1	Knob Elevation
6	576.70.10.3	Rear Sight Ball Bearing
7	576.70.14.1	Spring
8	576.70.17.3	Bearing Screw
9	576.30.02.1	Ejection Port Cover
10	576.70.04.1	Clamping Bar M4 Carb., M16 Rifl.
	576.71.04.1	Clamping Bar M4 OPS
11	576.70.03.1	Thumb Nut
12	576.30.08.1	Spring
13	576.30.07.1	Pin
14	576.30.06.1	Plunger
15	576.11.03.1	Buttstock Tube Lock
16	576.11.02.1	Nut
17	576.11.05.1	Screw
18	576.11.04.1	Washer
19	576.11.01.1	Carbine Receiver Extension
20	576.11.07.1	Screw
21	576.11.06.1	Receiver Extension Plate
22	2245110	Buttstock M4 Carbine, M4 OPS
	576.12	Buttstock M16 Rifle, M16 SPR
23	576.70.26.3	Pin
24	576.50.02	Barrel M4 Carbine, M4 OPS
	576.51.02	Barrel M16 Rifle, M16 SPR
25	576.50.11.1	Handguard M4 Carbine
	576.51.11.1	Handguard M16 Rifle
	2245113	RIS M16 SPR
	2245112	RIS M4 OPS
26	2245116	Compensator
27	512.50.06.2	Rubber Ring
28	576.70.20	Front Sight
	2245120	Flip up front sight
29	576.50.12.3	Screw
30	576.50.10.1	Handguard Cap M4 Carbine
	576.51.10.1	Handguard Cap M16 Rifle
	576.52.04.1	RIS Barrel Nut M4 OPS, M16 SPR
31	576.50.07.1	Deltaring M4 Carbine, M16 Rifle
	576.52.06.1	RIS Screw M4 OPS, M16 SPR
32	576.50	Barrel Sleeve M4 Carbine
	576.51	Barrel Sleeve M16 Rifl.
	576.53	Barrel Sleeve M16 SPR
	576.54	Barrel Sleeve M4 OPS
33	570.70.07.3	Spring Loaded Thrust Pad
34	576.40.09.0	Screw
35	576.30.01.1	Upper Receiver
36	576.40.18.1	Adjustment pin
37	576.40.05.1	Charging Handle
38	576.40.04.0	Slide Cover
39	570.40.07.0	Firing Pin
40	576.40.07.1	Bolt
41	576.40.13.1	Main Spring
42	576.40.06.0	Screw
43	506.20.39.0	Screw
44	570.40.11.1	Spring
45	576.40.17.0	Extractor
46	506.40.05.1	Bolt
47	506.40.06.1	Spring
48	506.40.16.0	Ejector
49	576.40.08.3	Pin
50	576.40.03.0	Slide
51	576.40.01.1	Slide Housing Right
52	576.40.14.1	Spring
53	576.40.11.0	Slide Catch
54	2245102	Magazine 30 rd
	2245100	Magazine 10 rd
55	576.10.11.0	Pin
56	576.40.15.3	Pin
57	576.40.02.0	Slide Housing Left
58	576.10.09.0	Bolt Catch Lever
59	576.10.10.0	Pin
60	576.20.16.3	Screw Nut
61	576.20.17.0	Safety Button
62	576.20.02.1	Trigger Housing Right
63	576.20.09.1	Bumper
64	576.20.23.3	Pin
65	576.20.18.3	Pin
66	576.40.08.3	Pin
67	576.20.12.1	Spring
68	576.20.04.1	Trigger Sear Arm
69	576.20.19.3	Pin
70	570.20.11.0	Hammer
71	576.20.15.3	Pin
72	570.20.67.3	Pin
73	576.20.07.0	Safety
74	576.20.01.1	Trigger Housing Left
75	576.20.11.0	Magazine Catch Button
76	576.20.13.1	Spring
77	576.20.06.0	Disconnector
78	570.20.23.3	Screw Nut
79	570.20.13.0	Hammer Strut
80	570.20.20.1	Spring
81	576.20.14.1	Hammer Spring Receptor
82	570.20.18.1	Spring
83	506.20.19.3	Spring
84	576.20.21.1	Spring
85	576.20.05.0	Trigger Sear
86	576.20.12.1	Spring
87	576.20.03.0	Trigger
88	570.20.25.3	Pin
90	576.20.10.0	Magazine Catch
91	576.20.08.0	Safety Lever
92	576.10.01.1	Lower Receiver M4 Carbine, M4 OPS
	576.13.01.1	Lower Receiver M16 Rifle, M16 SPR
93	576.10.02.1	Trigger Guard
94	576.10.04.1	Pin
95	576.10.05.1	Spring
96	576.10.12.3	Screw
97	576.10.03.3	Pin
98	576.10.06.1	Pistol Grip
99	576.10.08.3	Lock Washer
100	576.10.07.3	Screw
101	506.20.47.3	Allen Wrench SW 2.5
102	576.20.24.3	Allen Wrench SW 4
103	576.20.22.1	Allen Wrench SW 4
104	570.51.03.1	Wrench SW 13
105	512.20.42.1	Simulating Device

19 Variants and accessories
19.1 Variants

M4 Carbine
- Adjustable Buttstock
- Adjustable Front Sight (Elevation)
- Adjustable Rear Sight (Windage, Elevation)
- 16.2” Barrel Length





M4 OPS
- Adjustable Buttstock
- Rail Interface System
- Detachable Rear Sight
- Adjustable Front Sight (Elevation)
- Adjustable Rear Sight (Windage, Elevation)
- 16.2” Barrel Length

M16 Rifle
- Adjustable Front Sight (Elevation)
- Adjustable Rear Sight (Windage, Elevation)
- 21.2” Barrel Length





M16 SPR
- Rail Interface System
- Detachable Flip Up Rear Sight
- Adjustable Flip Up Front Sight (Elevation)
- Adjustable Flip Up Rear Sight (Windage)
- 21.2” Barrel Length

19.2 Accessories

	**M4/M16 Magazine** 10 Round 2245100 30 Round 2245102		**M4/M16 Flip Up Front Sight** 2245120		**Walther Xenon Tactical Flashlight** 2252516
	**M4/M16 Metal Compensator** 2245116		**M4/M16 Flip Up Rear Sight** 2245122		**Walther Cord Switch for Flashlight** 2252517 **Walther Flashlight Mount** 2252518
	**M4/M16 Magazine Speed Holster** 2245103		**M4/M16 Tactical Rear Sight** 2245121		**Walther XRL 635** 635 mm Red Laser 2245130 **Walther XGL 650** 650 mm Green Laser 2245131
	**M4 Special Force Crane Stock** 2245111 **M4 Retractable Stock** 2245110		**Walther PS 55 Scope** 2300580		**Walther PS 22 Red Dot Sight** 2300577
	**M4/M16 Quad RIS** for M4 Carbine 2245112 for M16 Rifle 2245113		**Walther RS 55 4x32** Compact Tactical Scope with Illuminated Reticle 2245132		**M4/M16 Carry Handle** 2245117

COLT M4/M16 .22 Rimfire Rifles
made by Carl Walther - Germany
under license from New Colt Holding Corp.

Distribution and repair service by:

UMAREXUSA®

This INSTRUCTION MANUAL should always accompany the firearm and be transferred with it upon change of ownership or when presented to another person.
A copy of the INSTRUCTION MANUAL is available FREE upon request from:

UMAREX USA Inc. www.umarexusa.com www.colt22rimfire.com
Sales + Warranty Service
6007 South 29th Street / Fort Smith, AR 72908 / USA Phone: 479-646-4210 / Fax: 479-646-4206

CONTACT

All technical changes and modifications reserved.

8.576.80.02
March 2009 - rev. A